82.pdf 1 29/09/2011 17:00:22
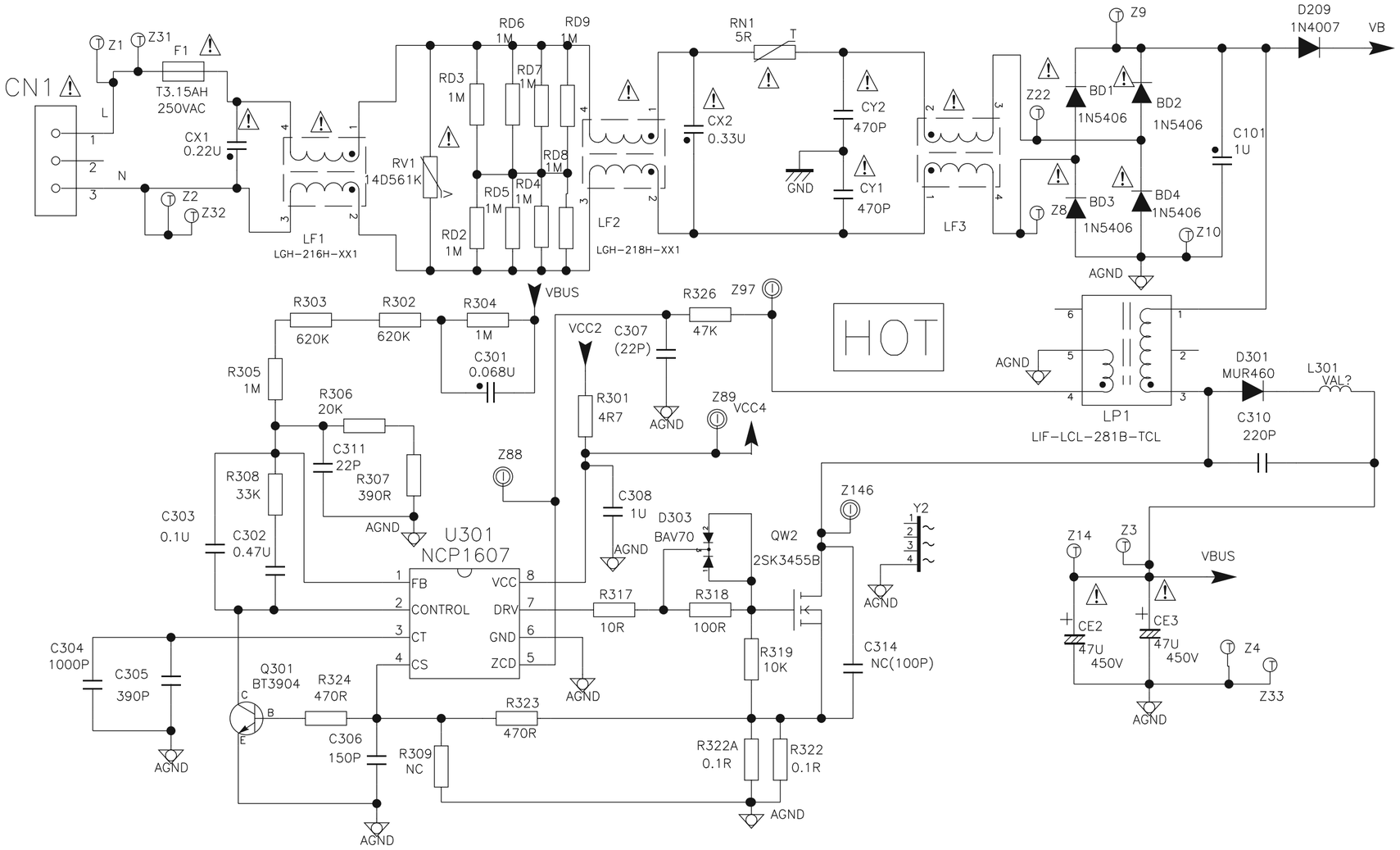
Placa Fonte 32/40AL800